CP PLUS

CP- VNC-V21ZR3-M

2MP Full HD Array Vandal Dome Camera - 30Mtr.

INDIGO

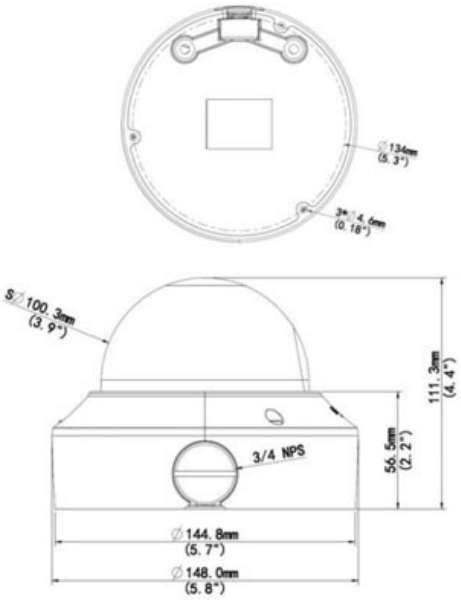

Main Features

- 1/2.7" 2MP PS CMOS Image Sensor
- Max 25fps@1080P
- Ultra H.265, H.265, H.264, MJPEG Triple-stream encoding
- DWDR, Day/Night (ICR), 2D-3D-DNR, ROI, AWB, AGC, BLC, HLC
- 2.8~12mm Motorized Lens
- IR Range of 30 Mtrs, Micro SD, IP67, IK10, PoE
- Supports Instastream technology, save diskspace and bandwidth upto 70%
- Mobile Software: Android, iOS
- CMS Software: IVMS

1/2.7" CMOS | 2MP 1080P | Digital WDR D-WDR | IP67 | AGC Auto Gain Control | Automatic White Balance | Backlight Compensation

InstaStream

CE FC RoHS COMPLIANT

*Product casing and specifications are subject to change without prior notice

CP PLUS

CP- VNC-V21ZR3-M

2MP Full HD Array Vandal Dome Camera - 30Mtr.

INDIGO

Feature	Specification
Image Sensor	1/2.7" 2MP Progressive scan CMOS
Minimum Illumination	Colour: 0.01Lux (F1.6 AGC ON) 0 Lux with IR
Shutter Speed	Auto/Manual, 1/6~1/100000 s
White Balance	Auto/Manual
Lens	2.8~12mm Motorized Lens
Gain Control (AGC)	Auto/Manual
Angle of View	112.7°~28.1°(H), 60.1°~15.4°(V), 146.5°~33.2°(O)
Video Compression	Ultra 265,H.265, H.264, MJPEG
Back Light Compensation	BLC/ HLC/ DWDR
Video Streaming	Triple
Resolution	1920 × 1080
Frame Rate	Main Stream:1080P (1920×1080): Max. 25 fps; Sub Stream: 720P (1280×720): Max. 25 fps; Third Stream: D1 (704×576): Max. 25 fps
Motion detection	Up to 4 areas
Privacy Mask	Up to 8 areas
ICR	IR-cut filter with auto switch (ICR)
ROI	Up to 2 areas
Protocol	IPv4, IGMP, ICMP, ARP, TCP, UDP, DHCP, RTP, RTSP, RTCP, DNS, DDNS, NTP, FTP, UPnP, HTTP, HTTPS, SMTP, SSL, SNMP ONVIF (Profile S, Profile G), API
Ethernet	1 RJ45 10M/100M Base-TX Ethernet
IR	IR Range of 30 Mtr., Smart IR
OSD	Up to 4 OSDs
Micro SD	MicroSD, up to 128GB
Operating Temperature	-40°C ~ +60°C (-40°F ~ 140°F)
Humidity	10%~ 95% RH (non-condensing)
Power Source	DC12V±25%, PoE (IEEE802.3 af)
Power Consumption	Max 6.5W
Weatherproof Standard	IP67 & IK10
Dimension	Φ148 x 111.3 mm (Ø5.8" x 4.4")
Weight	0.92kg

CE FC RoHS COMPLIANT

Product casing and specifications are subject to change without prior notice